TATRA

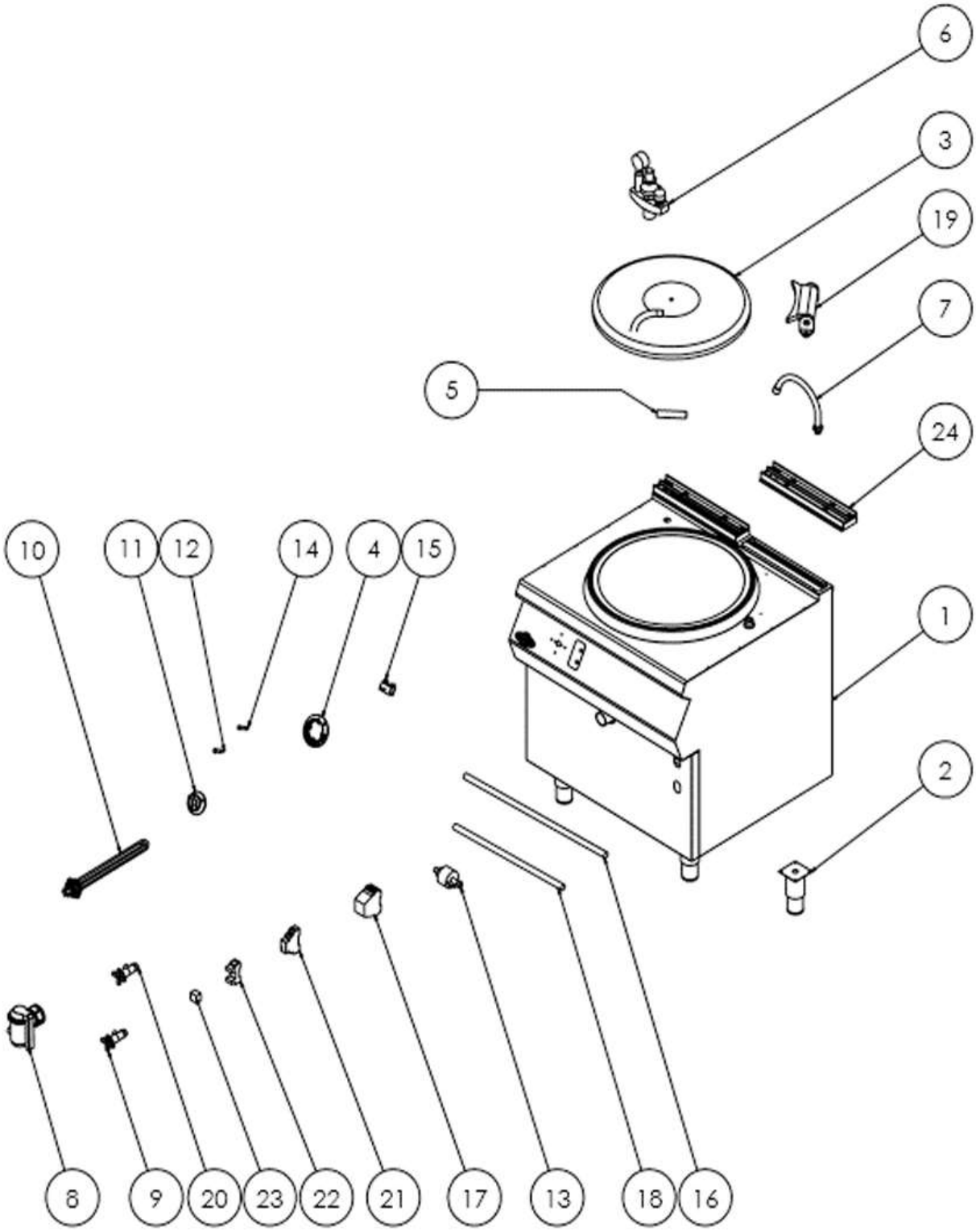

КОТЕЛ ЭЛЕКТРИЧЕСКИЙ 700 СЕРИИ TATRA TEK.87

1	BASE FRAME	Y.EMP.PLS.KTE.70.001	
2	FEET	Y.EMP.PLS.KTE.70.002	
3	LID	Y.EMP.PLS.KTE.70.003	
4	BUTTON BUFFER	Y.EMP.PLS.KTE.70.004	
5	HANDLE	Y.EMP.PLS.KTE.70.005	
6	MANOMETER	Y.EMP.PLS.KTE.70.006	
7	TAP	Y.EMP.PLS.KTE.70.007	
8	DRAINAGE VALVE	Y.EMP.PLS.KTE.70.008	
9	DRAINAGE VALVE (INTERNAL WALL)	Y.EMP.PLS.KTE.70.009	
10	RESISITANCE	Y.EMP.PLS.KTE.70.010	
11	BUTTON	Y.EMP.PLS.KTE.70.011	
12	WARNING LAMP-RED	Y.EMP.PLS.KTE.70.012	
13	SWITCH	Y.EMP.PLS.KTE.70.013	
14	WARNING LAMP-GREEN	Y.EMP.PLS.KTE.70.014	
15	SWITCH 0-1	Y.EMP.PLS.KTE.70.015	
16	FLEX HOSE 100CM	Y.EMP.PLS.KTE.70.016	
17	CONTACTOR 5,5 KW	Y.EMP.PLS.KTE.70.017	
18	FLEX HOSE 50CM	Y.EMP.PLS.KTE.70.018	
19	LID LIFTING MECHANISM	Y.EMP.PLS.KTE.70.019	
20	VALVE (INTERNAL WALL)	Y.EMP.PLS.KTE.70.020	
21	LIQUID LEVEL RELAY	Y.EMP.PLS.KTE.70.021	
22	ABB RELAY SOCKET	Y.EMP.PLS.KTE.70.022	
23	ABB RELAY	Y.EMP.PLS.KTE.70.023	
24	CASTING CHIMNEY HOOD	Y.EMP.PLS.KTE.70.024	

TATRA